EE 2240

Problem #03
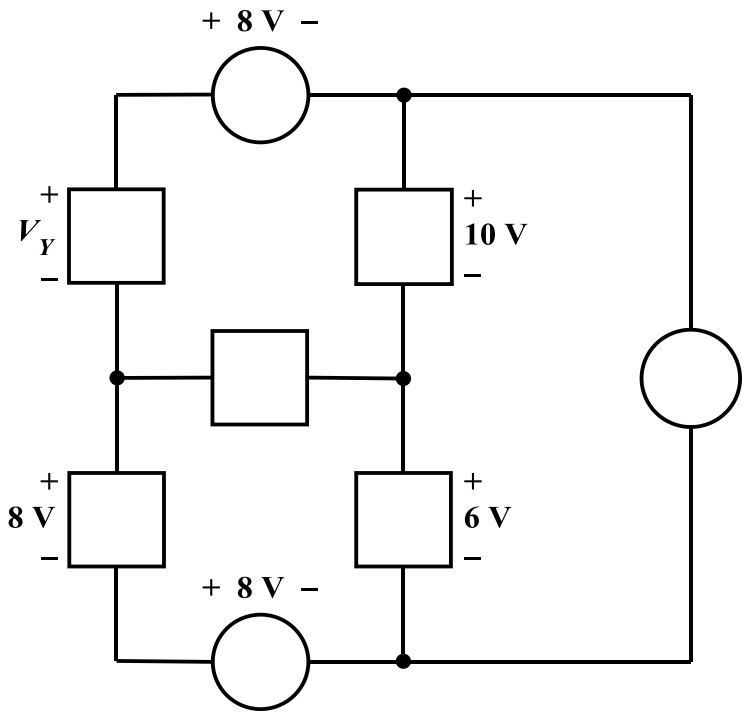
Determine the numerical value of V_Y .